southco	PROPRIETARY ITEM - EXCEPT FOR USES EXPRESSLY GRANTED IN WRITING INFORMATION DISCLOSED HEREON IS CONFIDENTIAL AND ALL RIGHTS PATENT AND OTHERWISE ARE RESERVED BY SOUTHCO, INC.	FLEXIBLE DRAW LATCH - CONCEALED MOUNTING (10-24 THREAD)	DATE	DRAWN	CHKD	SCALE	DRAWING NUMBER
			9-24-90	pek		1:1	J-F7-51

REV	DATE	DRAWN/CHKD	DESCRIPTION	PART NUMBER
A	12JAN93	KPL	PRN: S-1-03	F7-51
B	16AUG96	ALC	PRN: F7-41	
C	19OCT2002	AJH/DLH	PRN: P2002-0790	

INCHES

ALL DIMENSIONS WITHOUT TOLERANCES ARE FOR REFERENCE ONLY.

THIRD ANGLE PROJECTION

A4 PAPER SIZE

NOTES:

1. LATCH ASSEMBLY CONSISTS OF:
   SUB-ASSEMBLY:
   HANDLE - TPE, BLACK
   BRACKET - GLASS REINFORCED NYLON, BLACK.
   KEEPER - GLASS REINFORCED NYLON, BLACK

2. LATCH SUB-ASSEMBLY, KEEPER, AND SCREWS SHIPPED SEPARATELY, BULK. FOR LATCHES PACKAGED ONE PER BAG, ADD -P TO PART NUMBER.

3. MOUNT USING (3) 10-24 THREAD SCREWS (NOT SUPPLIED).
   SCREW LENGTH = PANEL THICKNESS PLUS .50.

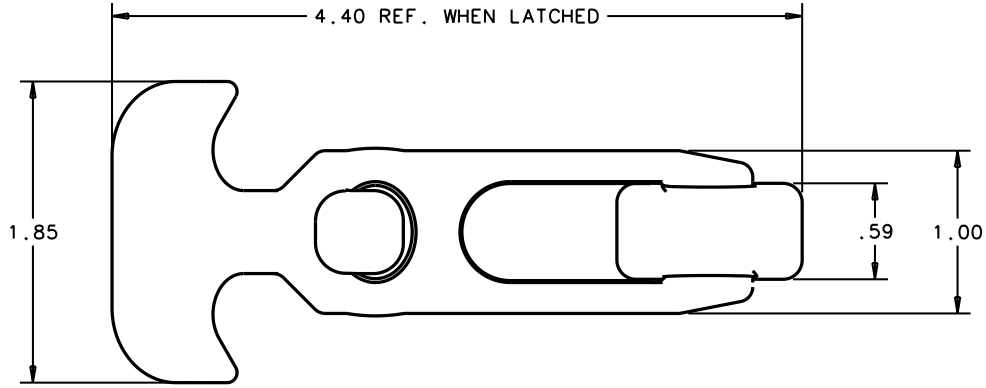

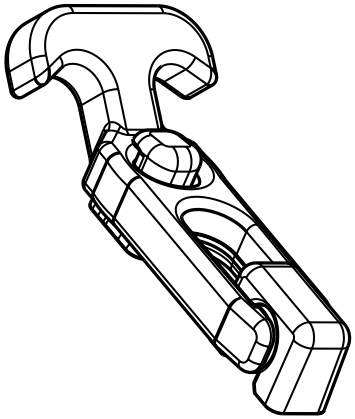
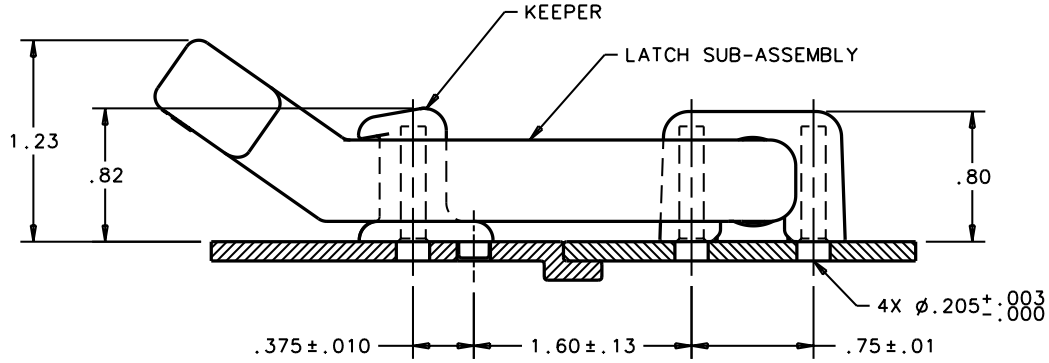
SCALE 3:4