DRAWING NUMBER	J-85-18
SCALE	N.T.S.
CHKD	ASK
DRAWN	ESK
DATE	1-14-58

SOUTHCO No. 85 FASTENER
BAIL HEAD STUD SPECIFICATIONS

SOUTHCO PART No.	LION PART No.	"U"	"L"	"F"	"T"
85-16-060-16	5-RB-60	.165	.320	.505	.729
85-16-080-16	5-RB-80	.185	.340	.525	.749
85-16-100-16	5-RB-100	.205	.360	.545	.769
85-16-120-16	5-RB-120	.225	.380	.565	.789
85-16-140-16	5-RB-140	.245	.400	.585	.809
85-16-160-16	5-RB-160	.265	.420	.605	.829
85-16-180-16	5-RB-180	.285	.440	.625	.849
85-16-200-16	5-RB-200	.305	.460	.645	.869
85-16-220-16	5-RB-220	.325	.480	.665	.889
85-16-240-16	5-RB-240	.345	.500	.685	.909
85-16-260-16	5-RB-260	.365	.520	.705	.929
85-16-280-16	5-RB-280	.385	.540	.725	.949
85-16-300-16	5-RB-300	.405	.560	.745	.969
85-16-320-16	5-RB-320	.425	.580	.765	.989
85-16-340-16	5-RB-340	.445	.600	.785	1.009
85-16-360-16	5-RB-360	.465	.620	.805	1.029
85-16-380-16	5-RB-380	.485	.640	.825	1.049
85-16-400-16	5-RB-400	.505	.660	.845	1.069
85-16-420-16	5-RB-420	.525	.680	.865	1.089
85-16-440-16	5-RB-440	.545	.700	.885	1.109
85-16-460-16	5-RB-460	.565	.720	.905	1.129
85-16-480-16	5-RB-480	.585	.740	.925	1.149
85-16-500-16	5-RB-500	.605	.760	.945	1.169
85-16-520-16	5-RB-520	.625	.780	.965	1.189

SOUTHCO PART No.	LION PART No.	"U"	"L"	"F"	"T"
85-16-540-16	5-RB-540	.645	.800	.985	1.209
85-16-560-16	5-RB-560	.665	.820	1.005	1.229
85-16-580-16	5-RB-580	.685	.840	1.025	1.249
85-16-600-16	5-RB-600	.705	.860	1.045	1.269
85-16-620-16	5-RB-620	.725	.880	1.065	1.289
85-16-640-16	5-RB-640	.745	.900	1.085	1.309
85-16-660-16	5-RB-660	.765	.920	1.105	1.329
85-16-680-16	5-RB-680	.785	.940	1.125	1.349
85-16-700-16	5-RB-700	.805	.960	1.145	1.369
85-16-720-16	5-RB-720	.825	.980	1.165	1.389
85-16-740-16	5-RB-740	.845	1.000	1.185	1.409
85-16-760-16	5-RB-760	.865	1.020	1.205	1.429
85-16-780-16	5-RB-780	.885	1.040	1.225	1.449
85-16-800-16	5-RB-800	.905	1.060	1.245	1.469
85-16-820-16	5-RB-820	.925	1.080	1.265	1.489
85-16-840-16	5-RB-840	.945	1.100	1.285	1.509
85-16-860-16	5-RB-860	.965	1.120	1.305	1.529
85-16-880-16	5-RB-880	.985	1.140	1.325	1.549
85-16-900-16	5-RB-900	1.005	1.160	1.345	1.569
85-16-920-16	5-RB-920	1.025	1.180	1.365	1.589
85-16-940-16	5-RB-940	1.045	1.200	1.385	1.609
85-16-960-16	5-RB-960	1.065	1.220	1.405	1.629
85-16-980-16	5-RB-980	1.085	1.240	1.425	1.649
85-16-1000-16	5-RB-1000	1.105	1.260	1.445	1.669

DRAWING NUMBER	J-85-18

REV. I - AJF DELETED Previous Rev.; PRN S-1-01
REV. J - 5-25-96 CEL PRN: 85-167
REV. K - 12JUN93 JC PRN: S-1-03
REV. L - 26AUG93 MFE PRN: S-93-1-N-1
REV. M 17DEC96 JAC PRN: S-1-06A

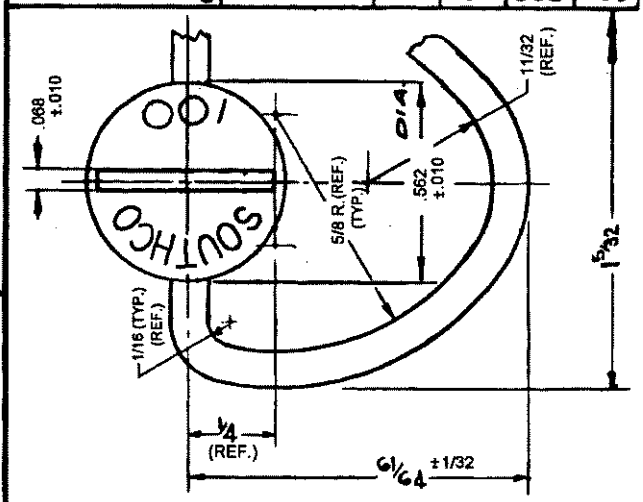

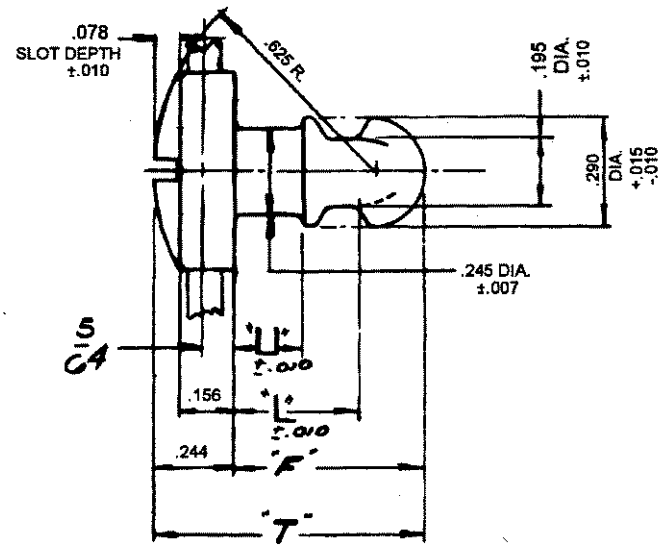

MATERIAL - STEEL
CASE HARDENED

FINISH - ZINC PLATE, CHROMATE PLUS SEALER.

PROPRIETARY ITEM - EXCEPT FOR USES EXPRESSLY GRANTED IN WRITING. INFORMATION DISCLOSED HEREON IS CONFIDENTIAL AND ALL RIGHTS, PATENT AND OTHERWISE, ARE RESERVED BY SOUTHCO, INC.

TOLERANCE UNLESS OTHERWISE NOTED ~ ALL DIMENSIONS ±.020

SOUTHCO