TORX® IS A REGISTERED TRADEMARK OF ACUMENT™ INTELLECTUAL PROPERTIES,LLC.

REVISION HISTORY			
REV	DATE	BY	DESCRIPTION
C	20JUN2012	BGL/TVA	PRN: P2012-0860

PART NUMBER 52-11-11-4-EEE SHOWN

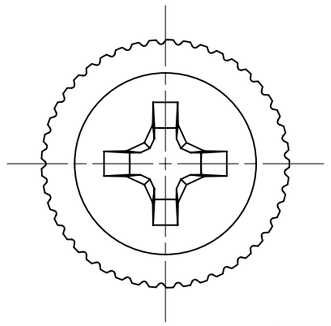

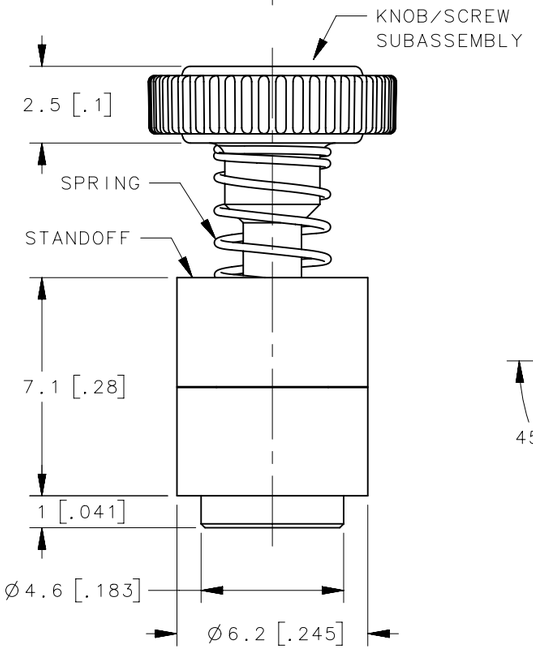

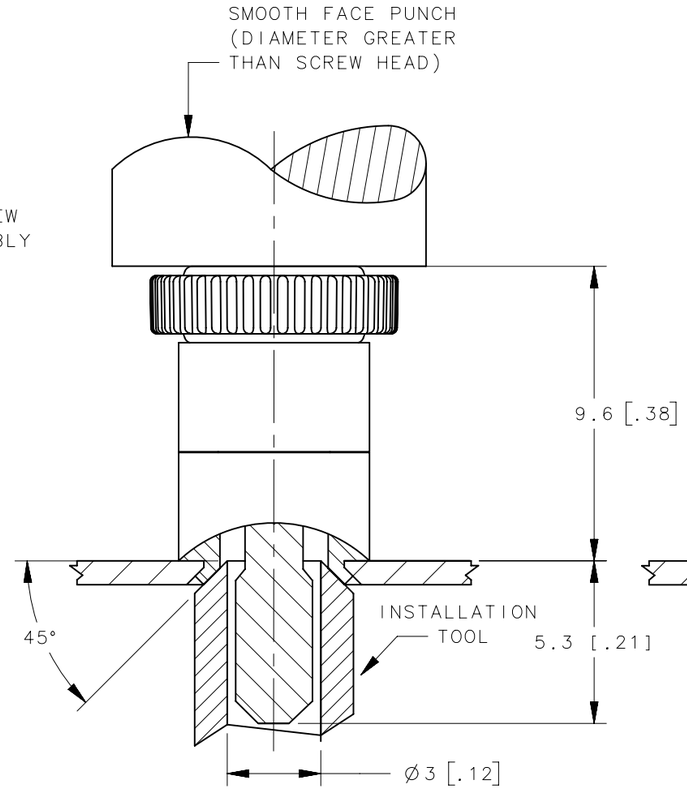

INSTALLATION
(FASTENED)

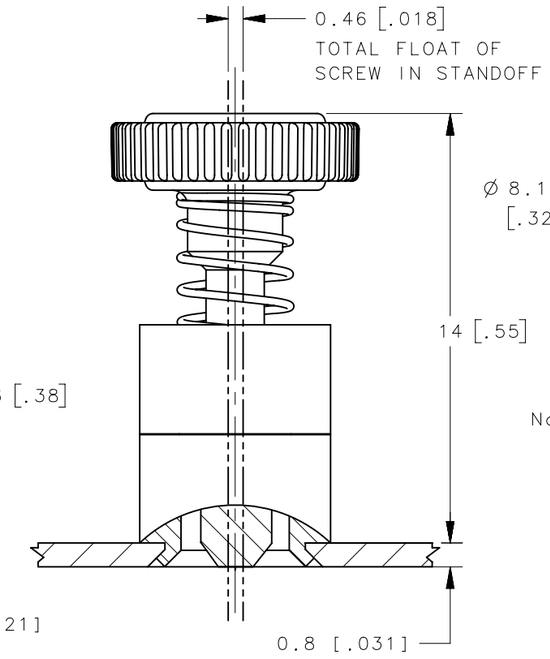

UNFASTENED

SCALE 1:1

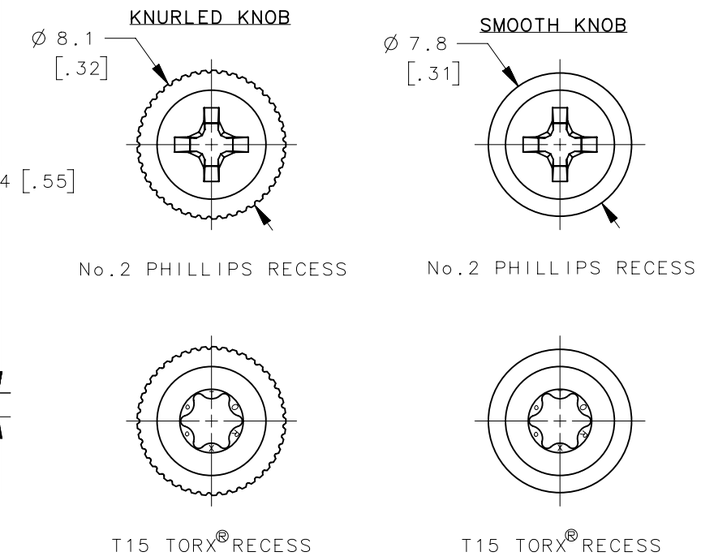

SCALE 3:1

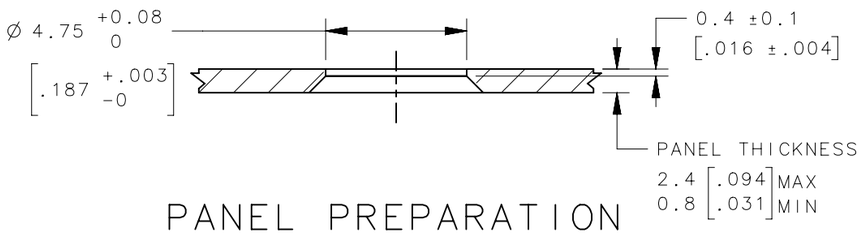

PANEL PREPARATION

"EEE" KNOB COLOR
SEE J-47-0-3 FOR DETAIL

PART NUMBER	KNOB STYLE	SCREW RECESS
52-16-11-4-EEE	SMOOTH	T15 TORX®
52-15-11-4-EEE	KNURLED	T15 TORX®
52-13-11-4-EEE	SMOOTH	No. 2 PHILLIPS
52-11-11-4-EEE	KNURLED	No. 2 PHILLIPS

NOTES:
A. MATERIAL AND FINISH: RoHS COMPLIANT
KNOB: PC/ABS UL94 V0 RATED, FLAME RETARDANT;TRIARYLPHOSPHATE (DOES NOT CONTAIN BROMINATED, CHLORINATED, OR HALOGENATED ADDITIVES). "EEE" IN PART NUMBER DENOTES KNOB COLOR.
SCREW: STEEL, HARDENED, ZINC PLATE PLUS SEALER
SPRING: 300 SERIES STAINLESS STEEL, PASSIVATED
STANDOFF: 6000 SERIES ALUMINUM, NATURAL
B. INSTALLATION INSTRUCTIONS:
1. PREPARE THE HOLE IN THE PANEL, COUNTERSINK UNDERSIDE OF THE PANEL AS SHOWN.
2. USE SOUTHCO INSTALLATION TOOL, PART NUMBER IS 47-104, TO FLARE THIS ASSEMBLY.
3. SMOOTH FACE PUNCH SURFACE AND INSTALLATION TOOL MUST REMAIN PARALLEL DURING FLARING OF STANDOFF. ONLY USE LIGHT PRESSURE TO FLARE STANDOFF. RECOMMENDED LOAD OF 3,000N.
C. RECOMMENDED MAXIMUM TORQUE OF 60 N-cm.
D. COSMETIC SPECIFICATION: ALL SURFACES (UNLESS OTHERWISE SPECIFIED) ARE TO BE PER SOUTHCO SPECIFICATION S-121-02 AND S-121-04, CLASS B (REFER TO SECTION 1.0 FOR CROSS REFERENCE TABLE).

PROPRIETARY ITEM
EXCEPT FOR USES EXPRESSLY GRANTED IN WRITING, INFORMATION DISCLOSED HEREON IS CONFIDENTIAL AND ALL RIGHTS, PATENT AND OTHERWISE, ARE RESERVED BY SOUTHCO, INC.

THIRD ANGLE PROJECTION

MILLIMETERS [IN]

TOLERANCES UNLESS OTHERWISE NOTED
ALL DIMENSIONS WITHOUT TOLERANCES ARE FOR REFERENCE ONLY.

PER ASME Y14.5M-1994

southco®
CONNECT·CREATE·INNOVATE

DESCRIPTION: OVERMOLD 52 ASSEMBLY, 4-40 THREAD FLARE-IN STYLE

SIZE	SYSTEM	DWG NO.			
A3	NX	J-52-1-440			
DRAWN BY	DATE	SCALE	SHEET		
JQ/TVA	04MAR2011	5:1	1 OF 1		