MINI CAM LOCK NAL-XS Ultra Compact

- Ultra compact type of only 13.2mm thick maximises space inside of cabinet.
- Ideal for coin-operated devices such as vending machine, ATM, and game machine, etc.
- NAL-XS-1: Key is removable in locked position only. (In order to ensure that the application is properly locked.)
  NAL-XS-2: Key is removable in both locked and unlocked positions.
- Cam is reversible (clockwise rotation at delivery).
- 1 Key Alike available. Key different is also available (10 key changes).

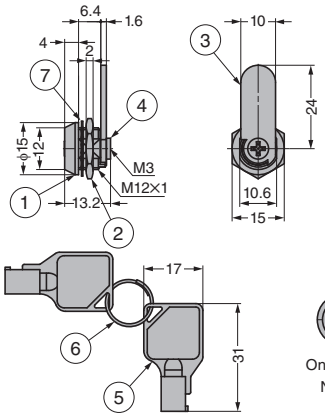

One-slot type
NAL-XS-1

Two-slot type
NAL-XS-2

[Cut Out Dimensions]

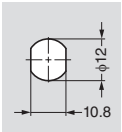

[Remarks]
- Be sure to read the "Cautions" 1.
- Spring works key to pull back. Push the key tightly and turn to lock and unlocked.
- Do not use at places subject to frequent vibrations. Otherwise, the hexagonal nuts may loosen.

No.	Part Name	Material	Finish
①	Body	Zinc Alloy (ZDC)	Chrome
②	Hex Nut	Steel	Clear Zinc Chromate (Trivalent)
③	Cam		Chrome
④	Screw (for Installing Cam)		Clear Zinc Chromate (Trivalent)
⑤	Key	Steel/Brass	Chrome / –
⑥	Key Ring	Stainless Steel (SUS304)	–
⑦	Washer	Steel	Clear Zinc Chromate (Trivalent)

RoHS	CAD	Item Code	Old Item Code	Item Name	Slots	Key Type	Weight (g)	Box (pcs)	Carton (pcs)
G	3D	150-034-270	–	NAL-XS-1-B	One Key	Key Different	21	100	500
G	3D	150-001-375	150-034-271	NAL-XS-1-D		Key Alike		100	500
G	3D	150-034-272	–	NAL-XS-2-B	Two Key	Key Different		100	500
G	3D	150-001-376	150-034-273	NAL-XS-2-D		Key Alike		100	500

Refer to 1 : P.718

MINI CAM LOCK NAL-S

- Ideal for coin-operated devices such as vending machine, ATM, and game machine, etc.
- NAL-S-1: Key is removable in locked position only. (In order to ensure that the application is properly locked.)
  NAL-S-2: Key is removable in both locked and unlocked positions.
- Cam is reversible (clockwise rotation at delivery).
- 1 Key Alike available. Key different is also available (25key changes).

[Cap] Sold Separately

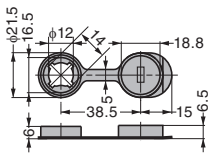

RoHS	CAD	Item Code	Item Name	Material	Colour	Weight (g)	Box (pcs)	Carton (pcs)
–	–	150-039-050	NAL-SCAP	PE	Black	1.5	1	2000

[Remarks]
- Be sure to read the "Cautions" 1.
- Spring works key to pull back. Push the key tightly and turn to lock and unlocked.

[Sold Separately]
- Cap (NAL-SCAP)

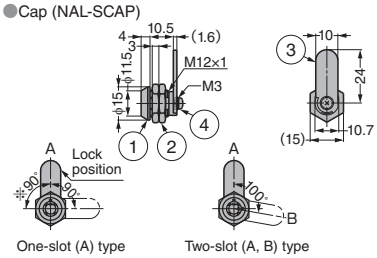

One-slot (A) type
NAL-S-1
(※Made to order)

Two-slot (A, B) type
NAL-S-2
Note) Install the body in the direction as shown.

[Cut Out Dimensions]

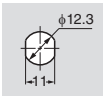

No.	Part Name	Material	Finish
①	Body	Zinc Alloy	Chrome
②	Hex Nut	Steel	Clear Zinc Chromate (Trivalent)
③	Cam		Chrome
④	Screw (for Installing Cam)		Clear Zinc Chromate (Trivalent)
⑤	Key		Chrome

RoHS	CAD	Item Code	Old Item Code	Item Name	Slots	Key Type	Door Thickness	Weight (g)	Box (pcs)	Carton (pcs)
G	3D	150-034-274	–	NAL-S-1-B	One Key	Key Different	Max. 2	25	100	500
G	3D	150-001-393	150-060-667	NAL-S-1-D		Key Alike			100	500
G	3D	150-034-275	–	NAL-S-2-B	Two Key	Key Different			100	500
G	3D	150-001-392	150-060-666	NAL-S-2-D		Key Alike			100	500

Refer to 1 : P.718