RECESSED HOOK NF-45D Soft-close Mechanism

- Self-retracting hook with soft-close mechanism.
- The hook tip is designed for easy opening.
- Becomes flat when retracted.
- The edges are gently rounded for safe use.

[Applications]
- Cabinet, trains

[Sold Separately]
- Hook bracket for sheet metal NF-45DB

[Recommended Screw]
- 27 - 31 mm thick wood: cross-recessed countersunk tapping screw 4 × 25
- 32 mm or thicker wood: cross-recessed countersunk tapping screw 4 × 30

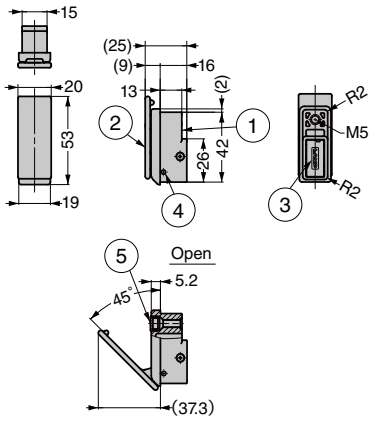

[Retractable]

[Cut Out Dimensions]

- Wood (27 - 31 mm thick)

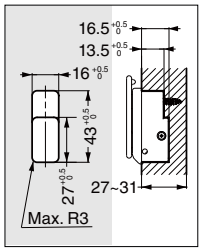

- Wood (31 mm or thicker)

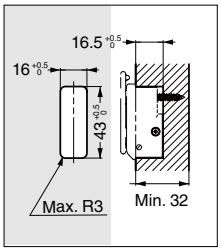

- Sheet metal

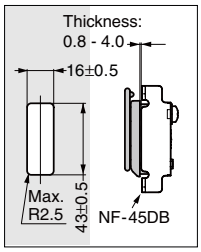

RoHS	CAD	Item Code	Item Name	Colour	Load Capacity of the Tip		Load Capacity of the Base		Weight (g)	Box (pcs)	Carton (pcs)
					N	kgf	N	kgf			
●	●	110-044-460	NF-45D-GR	Grey	93	9.5	500	51	32	10	200
●	●	110-044-461	NF-45D-BL	Black						10	200
●	●	110-044-462	NF-45D-SSL	Silver						10	200
●	●	110-046-695	NF-45D-WT	White						10	200

No.	Part Name	Material	Finish/Colour
①	Body	Aluminium Alloy (ADC)	Black
②	Arm		Gray / Black / Silver / White
③			
④	Cover	POM	Black
⑤	Knurling Pin	Stainless Steel (SUS304)	Plain
⑥	Spring		
⑦	Cushion Rubber	Chloroprene Rubber (CR)	Black

HOOK BRACKET FOR SHEET METAL NF-45DB

STEEL

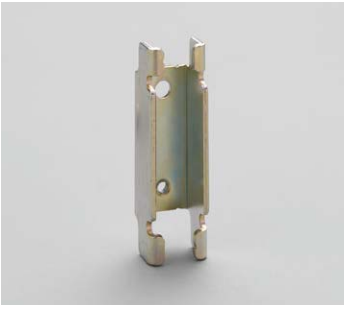

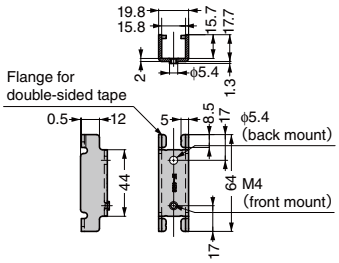

- Allows for mount on metal sheet of the NF-45D hook.
- Can be mounted from both front and back sides of sheet metal.
- Has flanges for double-sided tapes.
  This allows for temporary fixing before screwing.
  (Recommended thickness of tape: 0.8 - 1.0 mm)

[Parts Included]
- For front mount: cross-recessed countersunk screw M4 × 25
- For back mount: cross-recessed pan head screw (washer assembled)

RoHS	CAD	Item Code	Item Name	Material	Finish	Weight (g)	Box (pcs)
●	●	110-044-075	NF-45DB	Steel (SPCC)	Yellow Zinc Chromate	40	40