TRUNK HANDLE

TEST 1 P.470 STEEL

TMU-115

- The handle is recessed into the mounting plate keeping it flush with the mounting surface.
- Spring loaded:
  Folds and returns to flat position to stay out of the way when not in use.
- 90 degree stop feature.
- Rubber pad on handle provides an easy and comfortable grip.
- Front and back mounting options.

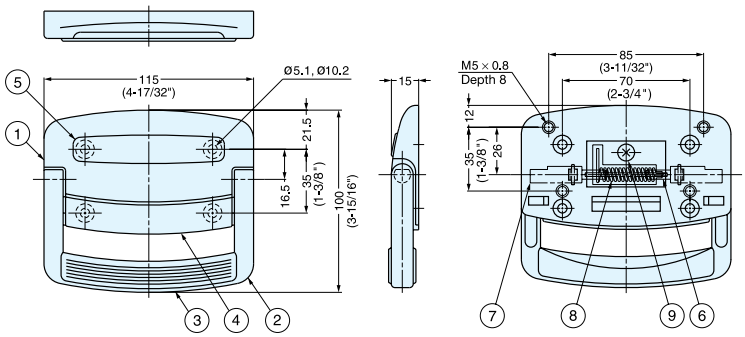

No.	Part Name	Material	Finish/Color
①	Body	Zinc Alloy	Chrome
②	Handle		
③	Grip	Synthetic Rubber	Black
④	Case Cover 1		
⑤	Case Cover 2		
⑥	Back Case	Steel	Yellow Zinc Chromate
⑦	Shaft		
⑧	Spring		
⑨	Screw		

Item No.	Load Capacity (kg)	Weight (g)	Box (pcs)	Carton (pcs)
TMU-115	40 (80 lbs)	460	10	40

TRUNK HANDLE

RoHS compliant TEST 1 P.470 NO SCREW

PT-148

- The handle is recessed into the mounting plate keeping it flush with the mounting surface.
- Spring loaded:
  Folds and returns to flat position to stay out of the way when not in use.
- 90 degree stop feature.
- Front and back mounting options.

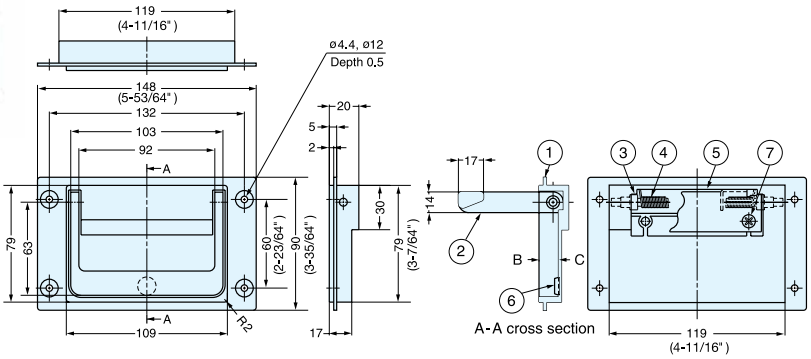

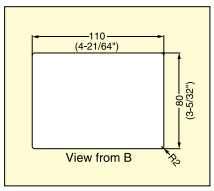

Cut Out Dimensions
for back mount

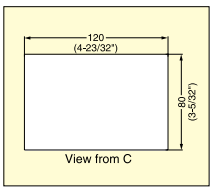

Cut Out Dimensions
for surface mount

No.	Part Name	Material	Finish/Color
①	Body	Zinc Alloy	Grey
②	Handle		
③	Shaft		Plain
④	Spring	Steel	Yellow Zinc Chromate
⑤	Back Case		
⑥	Bumper	Synthetic Rubber	Clear
⑦	Screw	Steel	Chromate

Item No.	Load Capacity (kg)	Weight (g)	Box (pcs)	Carton (pcs)
PT-148	50 (110 lbs)	645	10	100