LAMP® MULTI ANGLE LOCKING HINGE HG-MA95A

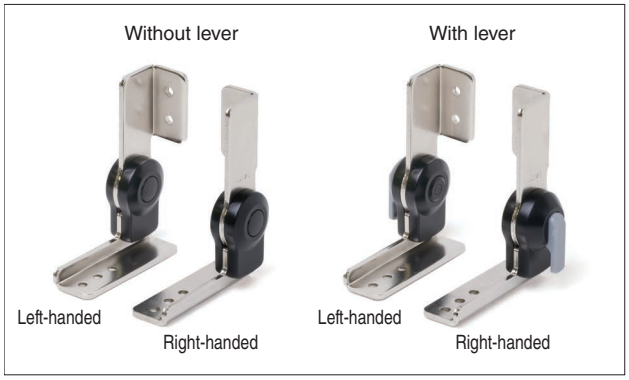

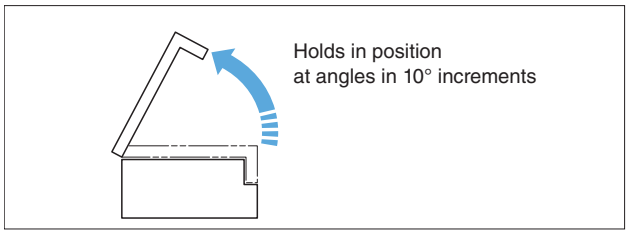

- Easily adjusts the flap angle by toggling the lever.
- Lock allows the hinge to be held in position from 0° to 180° in 10° increments.
- The flap is temporarily unlocked while the lever is pushed.
- The flap stays unlocked when the lever is lifted.
- Both hinge types can be used together.

[Applications]

- Medical equipment, analytical instruments, semiconductor equipment.

[Remarks]

- Be sure to read the "Cautions" 1.

[Recommended screws]

- M5 screw

Video Link

[Two ways to unlock]

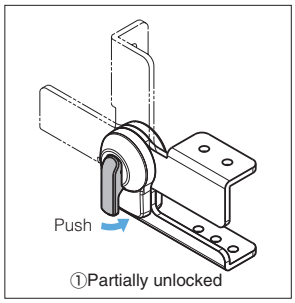

The flap is temporarily unlocked while the lever is pushed.

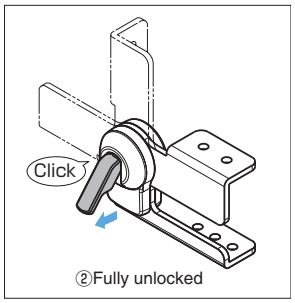

The flap stays unlocked when the lever is lifted.

[Locus chart]

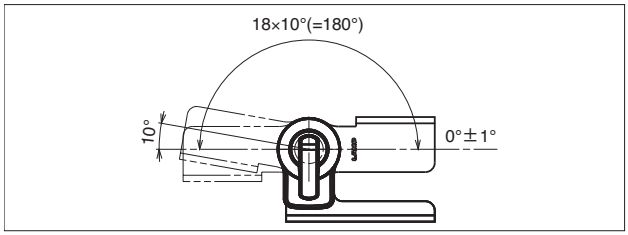

[HG-MA95A-L]

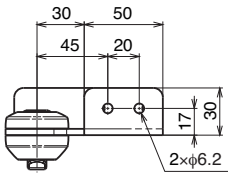

[HG-MA95AF-L]

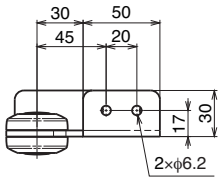

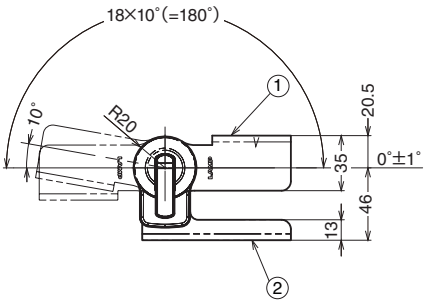

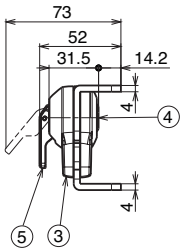

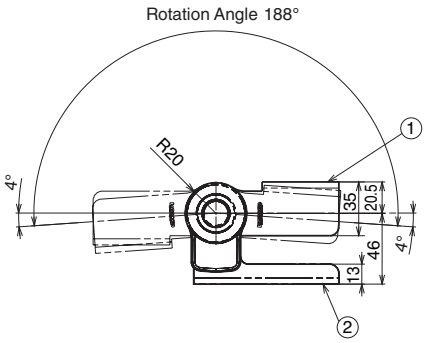

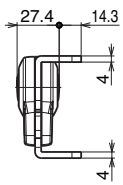

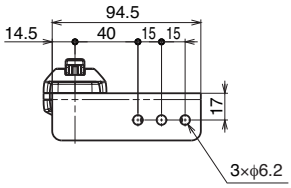

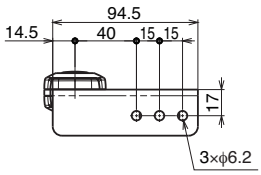

No.	Part Name	Material	Finish/ Colour
①	Bracket	Steel	Nickel
②	Base		
③	Plastic Cover	PC	Black
④	Pin	ABS	
⑤	Lever	PA	Light Gray

Left-handed shown. Right-handed is symmetrical.

RoHS	CAD	Item Code	Item Name	Position	Type	Max Torque N·m / pc	Max Torque kgf·cm/pc	Weight (g)	Box (pc)	Carton (pc)
G	3D	170-043-818	HG-MA95A-R	Right-handed	With lever	45	459	351	5	20
G	3D	170-043-819	HG-MA95A-L	Left-handed				351	5	20
G	3D	170-043-822	HG-MA95AF-R	Right-handed	Without lever	–	–	351	5	20
G	3D	170-043-823	HG-MA95AF-L	Left-handed				351	5	20

Refer to 1 : No.280 P.15