# GLASS DOOR CAM LOCK (W/INDICATOR) 2200 Lock Series 2200GL

### Features

- With indicator: Unlocked - Blue, Locked - Red.
- Ideal for application of showcase or audio rack.
- Available for both right and left swing door.
- Key can be removed when locked.
- 12 key changes available. (Max. 300 key changes as special order)
- Master Key system (170 key changes) available at surcharge. (1 Master Key only.)
- Keys can be shared with 2200 Lock Series.

### Installation

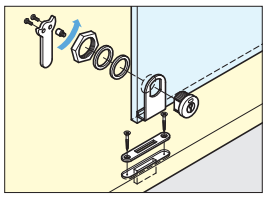

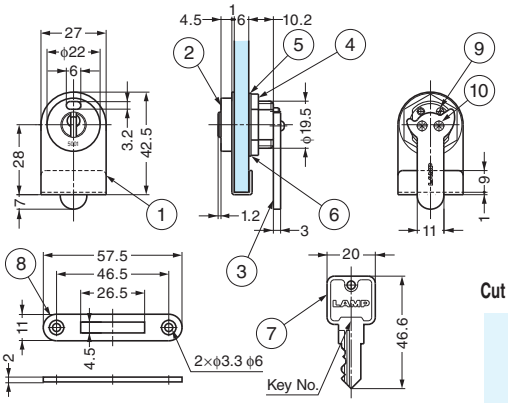


Cut Out Dimensions

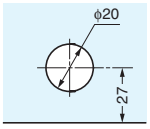


| No. | Part Name | Material | Finish/Colour/Type |
|---|---|---|---|
| ① | Front Plate | Stainless Steel (SUS304) | Polished |
| ② | Body | Zinc Alloy (ZDC) | Satin Nickel |
| ③ | Cam | Steel | Nickel |
| ④ | Hex Nut | Brass | Nickel |
| ⑤ | Plastic Washer | Polyamide (PA) | Natural |
| ⑥ | Washer | Steel | Chrome |
| ⑦ | Key | Brass | Nickel |
| ⑧ | Strike | Steel | Chrome |
| ⑨ | Screw (Stopper for the Lock Plate) | Brass | Plain |
| ⑩ | Screw (for Installing the Lock Plate) | Steel | Nickel/Pan Head Screw M2.5×8 |

| Item Code | Old Item Code | Item Name | Key Type | Glass Thickness | Weight | Box |
|---|---|---|---|---|---|---|
| 150-062-066 | — | 2200GL-B | Key Different | 4 - 6 | 75 g | 12 pcs |
| 150-001-396 | 150-060-914 | 2200GL-D | Key Alike | 4 - 6 | 75 g | 12 pcs |

Please contact us for this item with Master Key system.

# GLASS DOOR CAM LOCK 2100 Lock Series 2100GL

### Features

- Ideal for application of showcase or audio rack.
- Available for both right and left swing door.
- Key can be removed when locked.
- 12 key changes available in stock.
- Keys can be shared with 2100 Lock Series.

### Installation

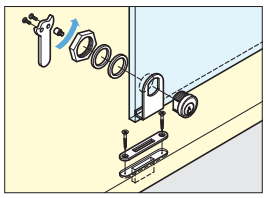

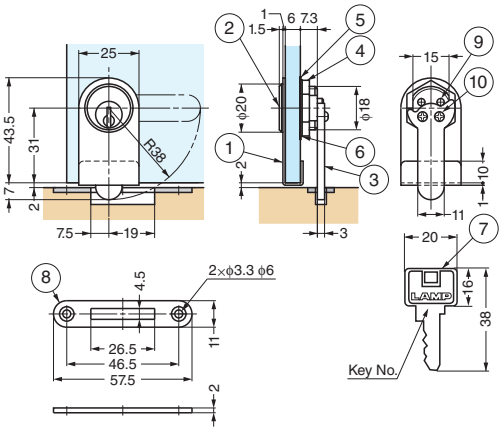


Cut Out Dimensions

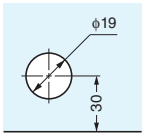


| No. | Part Name | Material | Finish/Colour/Type |
|---|---|---|---|
| ① | Front Plate | Stainless Steel (SUS304) | Polished |
| ② | Body | Brass | Satin Nickel |
| ③ | Cam | Steel | Nickel |
| ④ | Hex Nut | Brass | Nickel |
| ⑤ | Plastic Washer | Polyamide (PA) | Natural |
| ⑥ | Washer | Steel | Chrome |
| ⑦ | Key | Brass | Nickel |
| ⑧ | Strike | Steel | Chrome |
| ⑨ | Screw (Stopper for the Lock Plate) | Brass | Plain |
| ⑩ | Screw (for Installing the Lock Plate) | Steel | Nickel/Pan Head Screw M2.5×8 |

| Item Code | Item Name | Key Type | Glass Thickness | Weight | Box |
|---|---|---|---|---|---|
| 150-001-057 | 2100GL-B | Key Different | 4 - 6 | 75 g | 12 pcs |
| 150-001-058 | 2100GL-D | Key Alike | 4 - 6 | 75 g | 12 pcs |