BALL HOOK

TEST METHOD 19

PXB-QC05-101

Features

- Rounded design is safe with no sharp corners.
- The matte black finish is coated with a special chromate. This type combines the desirable glossiness of paint with the unique strength of plating.

Parts Included

Size 4 x 25 cross-recessed round flat head tapping screws

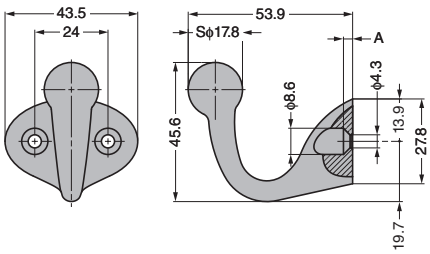

RoHS	CAD	Item Code	Item Name	Material	Finish/Colour	A	Load Capacity N	Load Capacity kgf	Weight (g)	Box (pcs)	Carton (pcs)
G	2D 3D	110-037-958	PXB-QC05-101-CR	Zinc Alloy (ZDC)	Chrome Plating	4.7	80	8.2	83	15	90
G	2D 3D	110-037-959	PXB-QC05-101-GP		24K Gold Plating					15	90
G	2D 3D	110-037-960	PXB-QC05-101-BL		Chromate Finish/Matte Black					15	90
G	2D 3D	110-037-961	PXB-QC05-101-M	Stainless Steel (SCS13)	Polished	3	150	15.3	100	10	100

*SCS13 is a cast steel material similar to SUS304.

BALL HOOK

TEST METHOD 19

PXB-QC05-111

Features

- Mounting screws are not visible, giving a seamless look.
- Rounded design is safe with no sharp corners.
- The matte black finish is coated with a special chromate. This type combines the desirable glossiness of paint with the unique strength of plating.

Parts Included

Size 4 x 32 cross-recessed flat head tapping screws

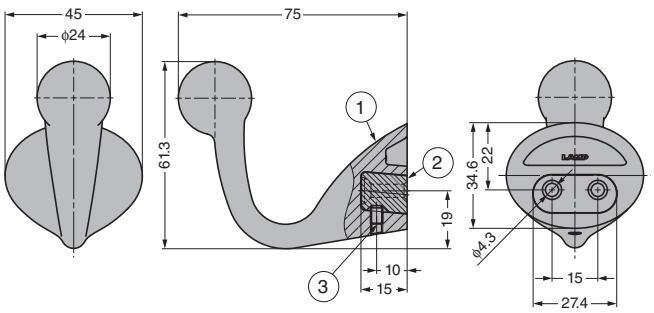

No.	Part Name	Material
①	Main Body	Zinc Alloy (ZDC)
②	Frame	
③	Hexagon Socket Set Screws	Stainless Steel

RoHS	CAD	Item Code	Item Name	Finish/Colour	Load Capacity N	Load Capacity kgf	Weight (g)	Box (pcs)	Carton (pcs)
G	2D 3D	110-037-962	PXB-QC05-111-CR	Chrome Plating	100	10.2	198	8	48
G	2D 3D	110-037-963	PXB-QC05-111-GP	24K Gold Plating				8	48
G	2D 3D	110-037-964	PXB-QC05-111-BL	Chromate Finish/Matte Black				8	48