Zwei L LEVER BOLT

L=R STAINLESS 316 STEEL STAINLESS

ZL-2401

Features

- Made of highly corrosion resistant SUS316
- Ultrapremium Zwei L finish. Zwei L finish: Using top class polishing technology, these products combine the elegance of Satin with the deep glow of a Mirror.

Sold Separately

- Indicator: ZL-2401-INR (for wood)
- Indicator: ZL-2401-INR-GB (for glass)

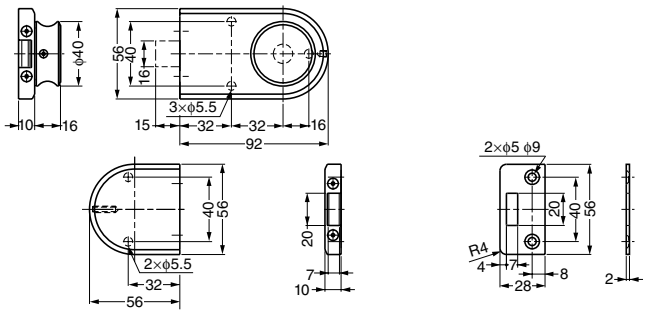

Indicator (Sold Separately)

How to Open in Case of Emergency

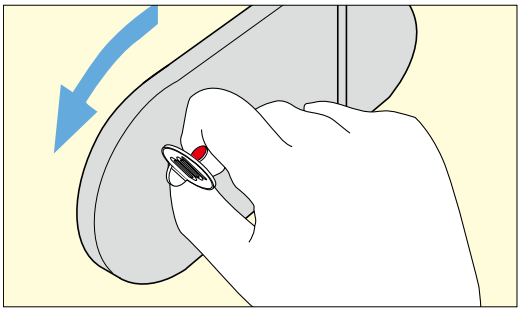

Can be unlocked by turning the coin 90˚.

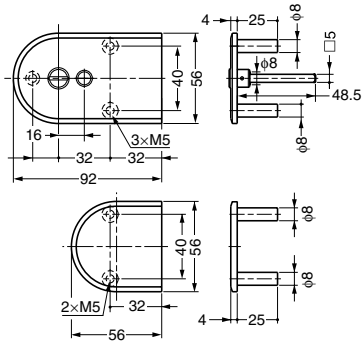

Indicator: ZL-2401-INR (for wood)

Cut Out Dimensions

Door (wood)

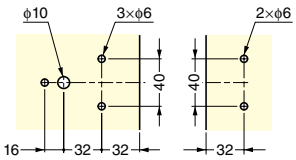

Door (glass)

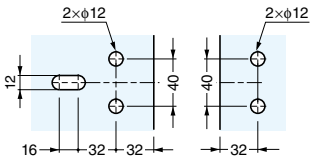

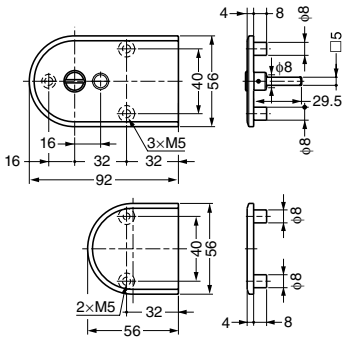

Indicator: ZL-2401-INR-GB (for glass)

Body

Item Code	Item Name	Door Thickness	Material	Finish	Weight	Box
140-050-401	ZL-2401	Wooden Door : 28 - 40/Glass Door: 8, 10, 12	Stainless Steel (SUS316)	Zwei L Finish	835 g	1 pc

Indicator (Sold Separately)

Item Code	Item Name	Type	Material	Finish	Weight	Box
140-050-404	ZL-2401-INR	Wooden Door	Stainless Steel (SUS316)	Zwei L Finish	332 g	1 pc
140-050-405	ZL-2401-INR-GB	Glass Door	Stainless Steel (SUS316)	Zwei L Finish	317 g	1 pc