MAGNETIC TOUCH LATCH (MORTISE TYPE) MC-U60

Features

For small overlay door.

Parts Included

- Pan head wood screw 2.9×13, Countersunk head wood screw 3.8×16
- Counter plate W12

Cut Out Dimensions

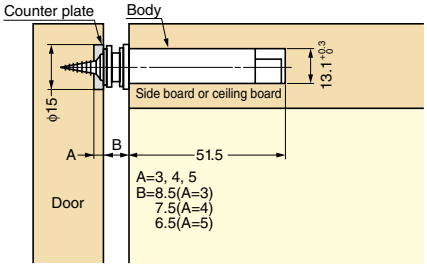

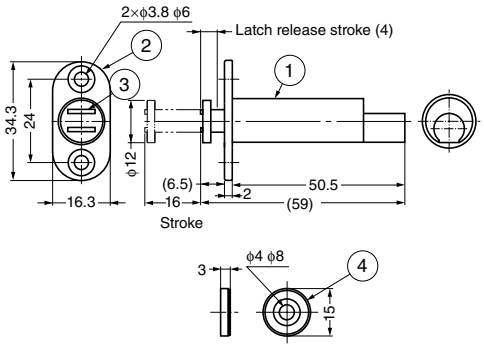

No.	Part Name	Material	Finish/Colour
①	Body	Polyacetal (POM)/ABS	Brown
②	Mounting Plate	Stainless Steel (SUS430)	–
③	Yoke	Steel	Nickel
④	Counter Plate	Steel	Nickel

Item Code	Item Name	Magnetic Force N	Magnetic Force kgf	Weight	Box	Carton
140-050-016	MC-U60	10.8 N	1.1 kgf	19 g	30 pcs	600 pcs

MAGNETIC TOUCH LATCH PM-4N HB

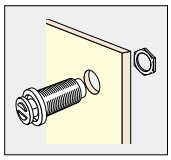

Installation

Features

- Push to open/close.
- Note: For overlay doors, make a 3.5 mm gap between door and cabinet frame.

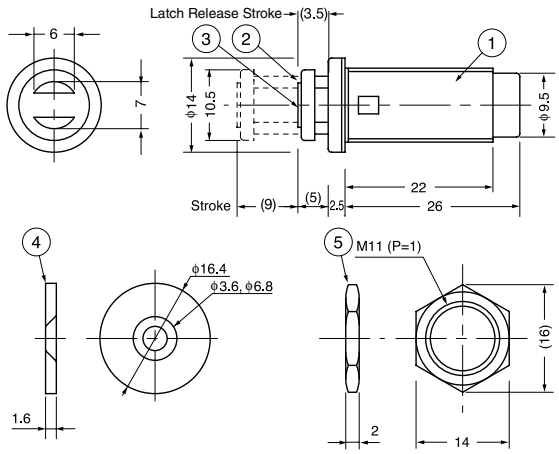

No.	Part Name	Material	Finish/Colour
①	Body	ABS	Black
②	Yoke	Steel	Black Nickel
③	Magnet	Ferrite	-
④	Counter Plate	Steel	GB
⑤	Nut		Yellow Zinc Chromate

Item Code	Item No.	Magnetic Force kgf	Weight	Box	Carton
140-059-147	PM-4N HB	1.3 kgf	9 g	350 pcs	2800 pcs