STAINLESS STEEL GLIDE BASE — AP-36

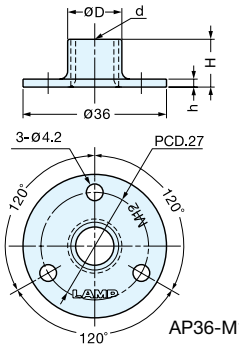

AP36-M12 is shown.

- 304 stainless steel construction is ideal for humid environments or applications where corrosion is an issue.

Material	Finish
304 Stainless Steel	Plain

Item No.	d	D	h	H	Weight (g)	Box (pcs)	Carton (pcs)
AP-36-M8	M8 × 1.25	9.6 (3/8")	1.5 (1/16")	12.0 (15/32")	16	100	1000
AP-36-M10	M10 × 1.50	11.0 (7/16")					
AP-36-N3	W3/8-16	10.9 (27/64")					
AP-36-M12	M12 × 1.75	13.9 (35/64")	2.0 (5/64")	11.5 (29/64")	20	80	800

GLIDE BASE — KD-555

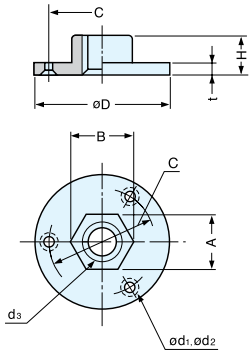

Material	Finish
Zinc Alloy	Yellow Zinc Chromate

Item No.	D	C	H	t	d_1	d_2	d_3	A	B	Weight (g)	Box (pcs)	Carton (pcs)
KD-555-28-M10	28 (1-3/32")	20	9.0	2.7	3.2	5.3	M10 × 1.5	13.0	14.0	15	240	1440
KD-555-25	25 (63/64")	19	7.6				W5/16-18	11.2	12.5	10	320	1920
KD-555-28	28 (1-3/32")	20	9.0				W3/8-16	13.0	14.0	15	240	1440
KD-555-39	39 (1-17/32")	30	11.0	3.0			W1/2-12	15.8	16.8	30	100	600

CASTER BRACKET — FA55-FIX

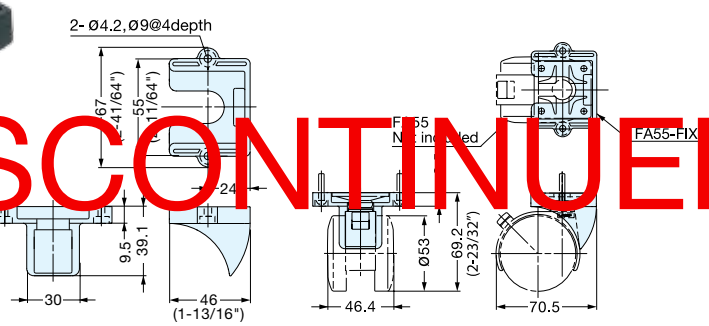

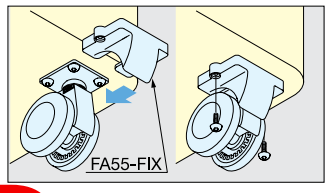

Application: Prevents caster from swinging.
Use with FA-55/FAU-55/FD-55/FDU-55

DISCONTINUED

Item No.	Weight (g)	Box (pcs)	Carton (pcs)
FA55-FIX	23	50	500

Material	Finish
Polyacetal	Black