DRAWING NUMBER
J-P2-5

NOTES:

A- COLOR - LOW GLOSS BLACK.
B- PULL IS SHIPPED BULK.
C- FOR PULL TO BE PACKAGED ONE PER BAG,
ADD SUFFIX "-P" TO THE PART NUMBER.

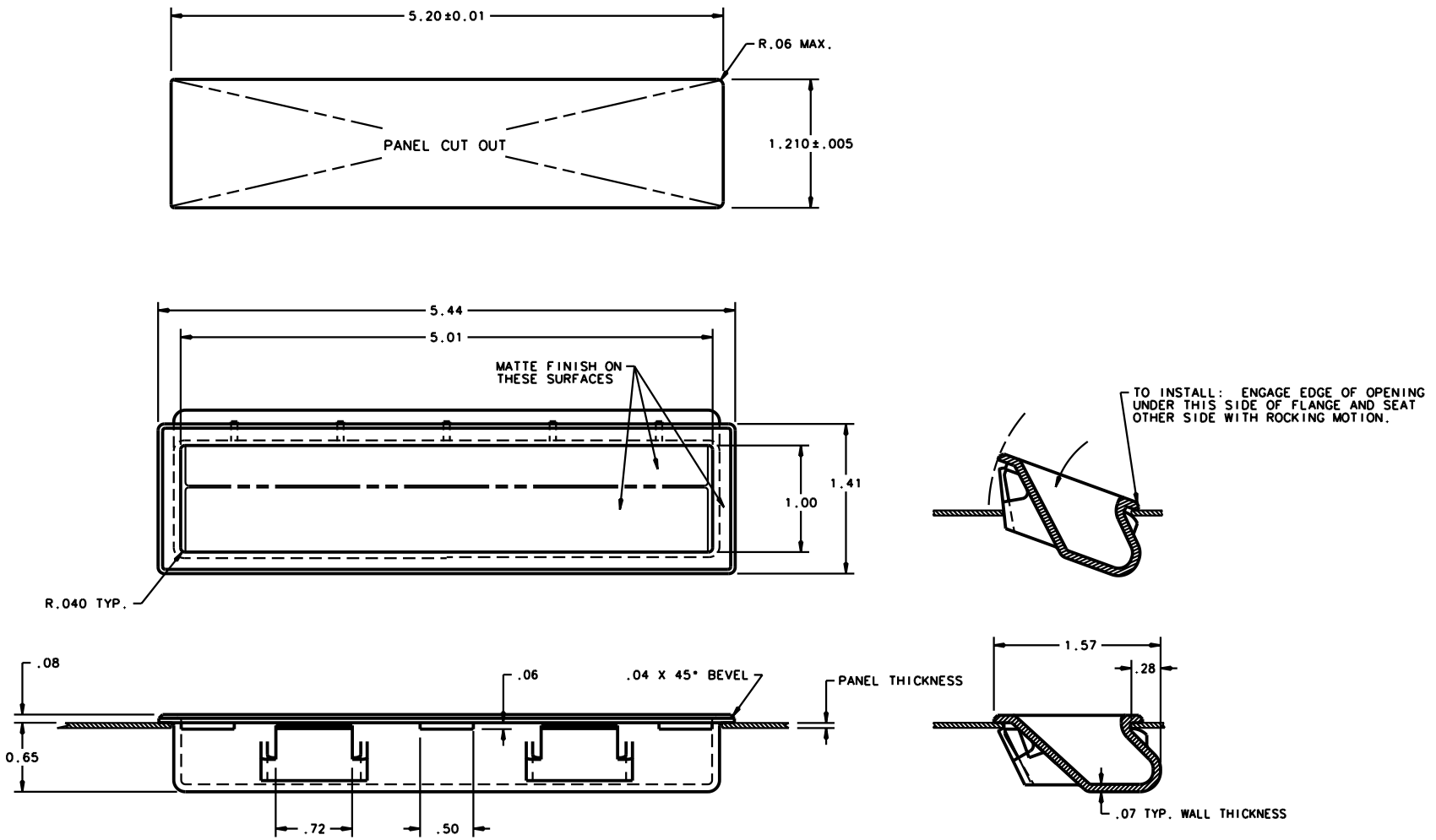

PART NUMBER	MATERIAL	PART NUMBER	MATERIAL	PANEL THICKNESS MAX.
P2-51	ABS, UL94-HB	P2-51-1	ABS, UL94-VO	.040
P2-52	ABS, UL94-HB	P2-52-1	ABS, UL94-VO	.055
P2-53	ABS, UL94-HB	P2-53-1	ABS, UL94-VO	.070
P2-54	ABS, UL94-HB	P2-54-1	ABS, UL94-VO	.085
				.100

DIMENSIONS IN INCHES
DIMENSIONS WITHOUT TOLERANCES ARE FOR REFERENCE ONLY

THIRD ANGLE PROJECTION

A3 PAPER SIZE

DRAWING NUMBER J-P2-5

SCALE 1 : 1

CHKD

DRAWN JHV

DATE 7-19-88

SNAP-IN POCKET PULL®, LARGE

PROPRIETARY ITEM - EXCEPT FOR USES EXPRESSLY GRANTED IN WRITING INFORMATION DISCLOSED HEREON IS CONFIDENTIAL AND ALL RIGHTS PATENT AND OTHERWISE ARE RESERVED BY SOUTHCO, INC.

REVISION
PRN: P2-84

REV.	DATE	DRAWN
1	22OCT2000	VR/JSS

southco