Measuring arms

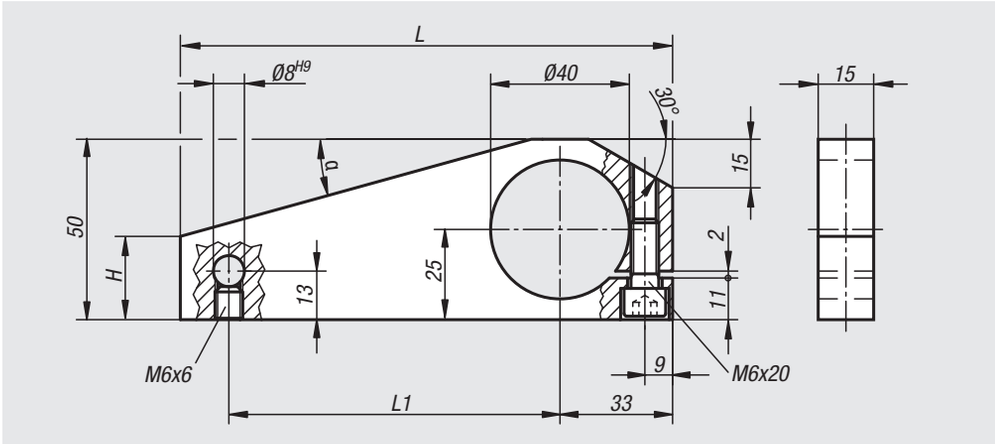

Material:
Steel.

Version:
Black oxidised.

Sample order:
nlm 33150-095

Note:
The measuring arms are suitable for pivoting columns 33110 and pivoting systems 33115.

Order No.	L	L1	H	α
33150-095	95	50	18	30°
33150-140	140	95	23	15°