Item description/product images

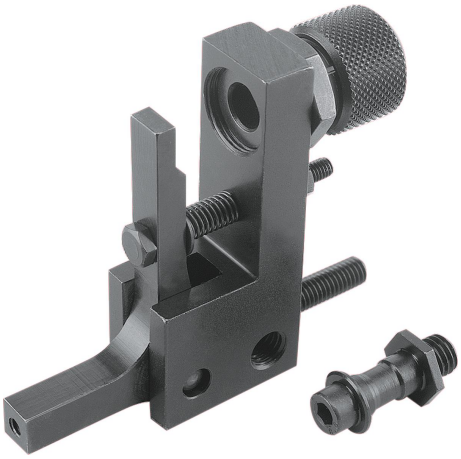

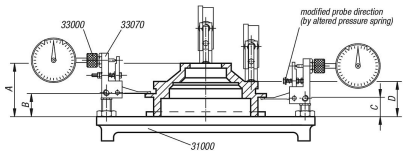

Description

Material:
Steel.

Version:
Black oxidised.

Note:
To alter the probe direction and mounting of the deflection dial gauge holder with the fastening adaptors (supplied) see technical information.

Accessory:
Dial gauges see 32540 and 32542.
Probe inserts see 33042-040016.

Drawings

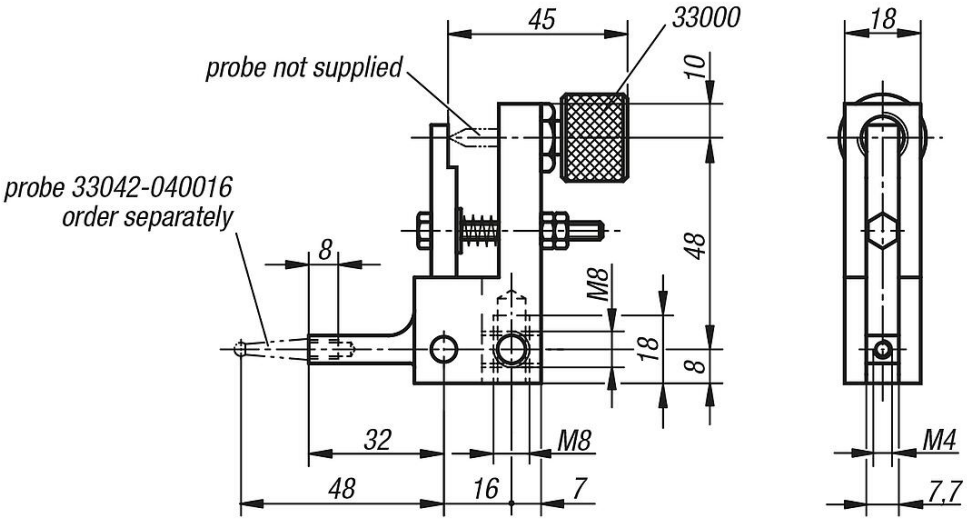

Overview of items

Order No.	Dimensions
33072-048	see drawing