Southco® Push to Close Latches

Squeeze-release Design

- **Squeeze tabs to open**
- **Small size is designed for limited-space applications**
- **Single-hole, snap-in installation**

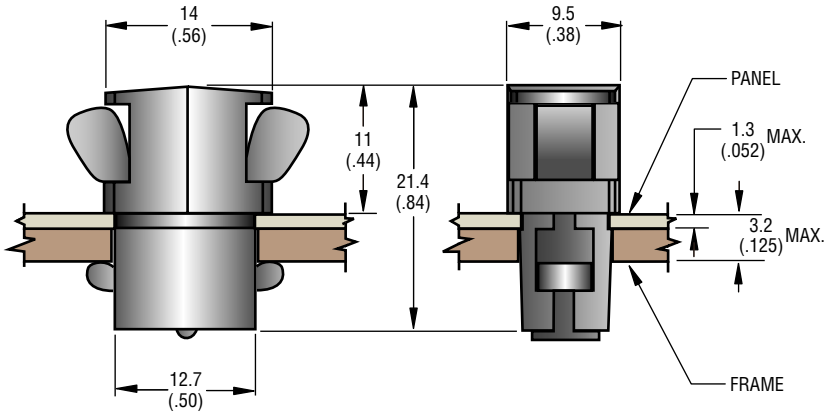

PART NUMBER
60-10-101-12 •

Material and Finish

CATCH: Acetal, black.
SHELL: Acetal, black.

Fastened

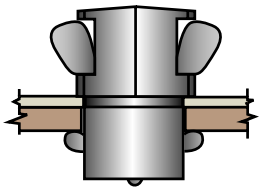

To operate squeeze tabs to release; pull panel open. To lock, just slam panel closed.

Unfastened

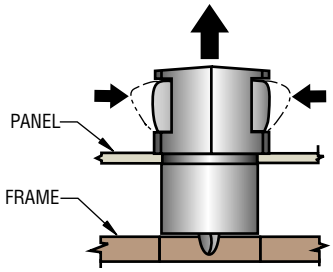

Panel Preparation

To install, prepare panel and frame as shown; snap assembly into panel hole.

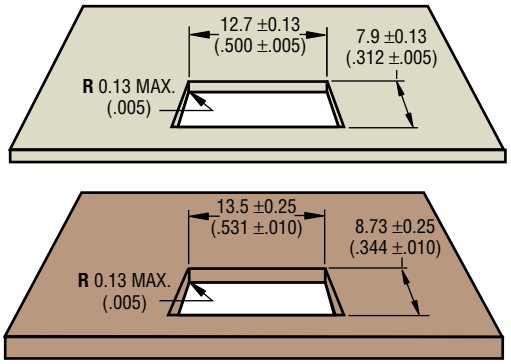

Product Strength Guidelines

(To assist in your product selection; samples are available for your evaluation.)

Maximum load between panels, which permits unlatching: 13.5 N (3 lbs.)
Maximum intermittent static load: 170 N (35 lbs.)

millimeter (inch)

millimeter
(inch)

Dimensions without tolerances are for reference only.